Sebők István

9 MM GLOCK -17 PISTOL MAINTANENCE AND CHECKING WITH SUPPORT OF PROCESS OF RISK MANAGEMENT

Abstract

The process of risk management is used in all aspects of life and military operations. The method is applied in the financial sector and in the building trade as well. In military sector it is an elemental part of planning of military operations. Its other part is the occupational safety. This risk management will be presented from a view showing risk estimate of the pistol. Anyway it is a legal requirement to carry out such an analysis.

Keyword: pistol, risk management, maintenance, identity hazard

Introduction

Risk Management Process is an extremely set and niggling process. It's used by financial affair, trade, company management, sphere of the right and the book-keeping. It is current both in civil and military area. This study presents an actual case inserting the process into the system of the weapon check and its maintenance. It's presented those join points which must be paid attention to and necessary to the weapon check.

The Hungarian Defense Forces (hereafter: HDF) introduced the risk management process into training, the operational environments, equipment & materiel acquisition in the late 1990s. Risk management was originally perceived as solely a labour safety officer function. However, by the early 2000s, the HDF established a goal to integrate risk management into all HDF processes and activities as well as into every individual's behavior, both on and off duty. Since the process was introduced, the personal involvement of commanders in preventing accidents-and their aggressive use of the process-have become driving factors in the steady downward trend in HDF accidental losses.

As there are no regulations and guides by the Hungarian Defence Forces which could support finishing these documents, so the regulations used by U.S. Forces were taken as a basis in this study to find the join points. It is very important to know the original terminology by checking and maintenance, because there is no Hungarian terminology and interpretation.

Leaders must understand the importance of the process in conserving combat power and resources. Risk management, like reconnaissance and security, is an ongoing process that continues from role to role or problem to problem. Within the problem, leaders must know when the process begins and who has responsibility. It must be integral to the military decision. The process is an important means to enhance situational awareness.

The GLOCK pistols are the product of advanced technology and incorporate numerous innovative design features which result in ease of operation, extreme reliability, simple function, minimal maintenance, durability and light weight. GLOCK was the first company to successfully produce a polymer handgun receiver and marry it to a strong steel slide and bar- rel. The GLOCK pistol incorporates the “Safe Action” system which features three safeties and is similar to a constant double action only system. Special processes arise from this construction and function, this procedure is presented in this study.

1. Risk management process

Risk management is the process of identifying, assessing, and controlling risks arising from operational factors and making decisions that balance risk costs with mission benefits. Leaders and soldiers at all levels use risk management. It applies to all missions and environments across the wide range of HDF operations. Risk management is fundamental in developing confident and competent leaders and units. Proficiency in applying risk management is critical to conserving combat power and resources. For the current and future commandants and tool operator professional staff must be worked out by the current leaders and operator engineers the five steps risk management process of the tool.

Risk is characterized by both the probability and severity of a potential loss that may result from hazards due to the presence of an enemy, an adversary, or some other hazardous conditions. Perception of risk varies from person to person. What is risky or dangerous to one person may not be to another. Perception influences leaders' decisions. A publicized event such as a training accident or a relatively minor incident may increase the public's perception of risk for that particular event and time-sometimes to the point of making such risks unacceptable. Failure to effectively manage the risk may make an operation too costly-politically, economically, and in terms of equipment. This chapter presents the background, principles, applicability, and constraints relating to the risk management process.

The process and system of risk management is presented by the undermentioned 1. figure. Some steps will be presented later in details. The figure is incomplete and not detailed. It supports for better understanding the system and its join points.

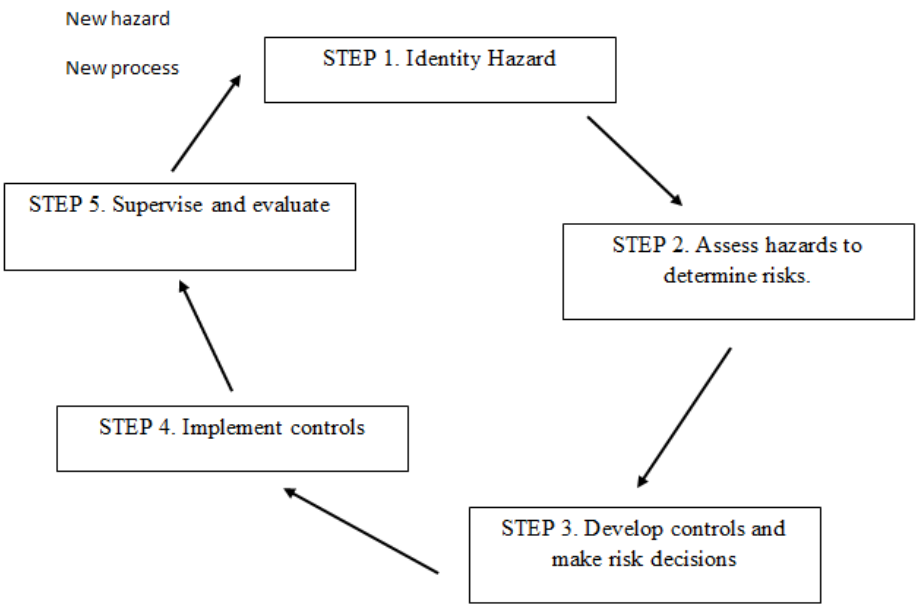

Figure 1: Risk Management method and process

STEP 1. IDENTIFY HAZARDS

A hazard is an actual or potential condition where the following can occur due to exposure to the hazard damage to or loss of equipment and property. Specialties of terrain and weather should be considered in this step. In addition to those due to the enemy or adversaries, the most obvious hazards to military operations are due to terrain and weather. Terrain and weather affect the type of hazard encountered. When the enemy uses terrain to his advantage, the risk is clearly tactical. The aspects of terrain and weather may create situations where accident risks predominate. When looking at this from a purely operation perspective, familiarity of the unit with the terrain and its associated environment must be paramount. The basic issues, how long the unit has operated in the environment and climate. Weather works hand-in-hand with terrain to create hazards. To identify weather hazards, leaders and soldiers must assess the impact on operating systems. Mistakes include not considering the effects of climate and weather on maintenance of weapon and equipment before beginning an operation.

STEP 2. Assess hazards to determine risks

Development as well as engineer and technical properties of the device, in this case the pistol should also be considered. GLOCK pistols combine the safety and simplicity of revolver-like operation with a manageable constant double action only trigger pull, high magazine capacity, rapid recovery and the reduced recoil of a modern, semiautomatic pistol. The major metal components of GLOCK handguns are treated with GLOCK's special hardening surface process called “tenifer” that leaves them nearly as hard as a diamond, seals out moisture and helps prevent corrosion. This surface hardening process penetrates the surface of the slide, barrel and GLOCK brand metal sights. The matte black finish is a final process applied to the surface making the pistol extremely resistant to abrasions and scratches. Should this black finish wear off after heavy and extensive use, the surface still retains its corrosion protection and durability.

Step 2 completes the risk assessment. Risk is the chance of hazard or bad consequences. This step examines each hazard in terms of probability and severity to determine the risk level of one or more hazardous incidents that can result from exposure to the hazard.

a.) Hazard Probability (the first critical point)

Leaders assess each hazard in relation to the probability of a hazardous incident. The probability levels estimated for each hazard may be based on the operation, course of actions being developed and analyzed, or frequency of a similar event:

- FREQUENT: Expected to occur several times over duration of the operation.
- LIKELY: Occurs several times in service life. Expected to occur during the operation.
- OCCASIONAL: May occur about as often as not during the operation.
- SELDOM: Not expected to occur during the operation.
- UNLIKELY: Can assume will not occur during the operation.

b.) Hazard Severity (the second critical point)

This point addresses the severity of each hazard. It is expressed in terms of loss of or damage to equipment or property. The degree of severity estimated for each hazard may be based on knowledge of the results of similar past events:

- CATASTROPHIC: Loss of major or critical system or equipment
- CRITICAL: Extensive or major damage to equipment or systems.
- MARGINAL: Minor damage to equipment or systems, property, or the environment.
- NEGLIGIBLE: Slight equipment or system damage, but fully functional and serviceable.

Risk Assessment Matrix

In this point leaders expand what they understand about probable hazardous incidents into estimates of levels of risk for each identified hazard and an estimate of the overall risk for the operation. Estimating risk follows from examining the outcomes of the probability and severity of hazardous incidents.

This point is more art than science. Both its definition and presentment could be various. The number of the levels is different. By my classification all risks are rated into „low” at least. There are cases where some risks are excepted. Much depends on the use of historical lessons learned, intuitive analysis, experience, and judgment. Uncertainty can arise in the assessment of both the probability and severity of a hazardous incident. Uncertainty results from unknowns about a situation; from incomplete, inaccurate, undependable, or contradictory information; and from unforeseen circumstances. Therefore, assessment of risk requires good judgment.

The standardized matrix that can be used to assist in this process. Leaders enter the estimated degree of severity and probability for each hazard in Hazard Probability and Hazard Severity from the severity row and probability column, respectively. The point where the severity row and probability column intersect defines the level of risk. For example, if the hazard is estimated to have a *critical* severity and a *likely* probability, the level of risk is high. The dark or light colors in the table sketched by me show the measure of the risk. As I mentioned that there is no negligible risk, I did not define an empty white field in the table.

Risk Assessment Matrix					
	Probability				
Severity	Frequent	Likely	Occasional	Seldom	Unlikely
Catastrophic					
Critical					
Marginal					
Negligible					
	Extremely High Risk				
	High Risk				
	Moderate Risk				
	Low Risk				

Figure 2. Risk Assessment Matrix

Important breakdowns according to me belonging to different levels are following:

Extremely High Risk: Loss of ability to accomplish the mission if hazards occur during mission.

Example GLOCK -17 pistol:

- Observed problem: The pistol slide fails to lock open on last round.
- Probable causes: Worn slide stop lever notch
- Correction: Contact Warranty Department if replacement of the magazine and slide stop lever did not correct the failure.

High Risk: Significant degradation of mission capabilities in terms of the required mission standard, inability to accomplish all parts of the mission, or inability to complete the mission to standard if hazards occur during the mission.

Example GLOCK -17 pistol:

- Observed problem: Trigger safety fails to return to engaged (forward) position.
- Probable causes: Improperly stored in original box with trigger in full forward position (trigger safety fully depressed)
- Correction: Replace trigger bar. When stored in original box, pistol must be unloaded, trigger in back position.

Moderate Risk: Expected degraded mission capabilities in terms of the required mission standard will have a reduced mission capability if hazards occur during mission.

Example GLOCK -17 pistol:

- Observed problem: Inconsistent trigger pull or will not release.
- Probable causes: Connector loose in housing
- Correction: Replace housing.

Low Risk: Expected losses have little or no impact on accomplishing the mission.

Example GLOCK -17 pistol:

- Observed problem: Light off-center strike.
- Probable causes: Slide lock reversed or not beveled.

– Correction: Replace.

STEP 3. Develop controls and make risk decisions

After assessing each hazard, leaders develop one or more controls that either eliminate the hazard or reduce the risk (probability and/or severity) of a hazardous incident. When developing controls, they consider the reason for the hazard not just the hazard itself.

Types of Controls: Controls can take many forms, but fall into three basic categories-educational controls, physical controls, and avoidance:

- Educational controls. These controls are based on the knowledge and skills of the units and individuals. Effective control is implemented through individual and collective training that ensures performance to standard.
- Physical controls. These controls may take the form of barriers and guards or signs to warn individuals and units that a hazard exists. Additionally, special controller or oversight personnel responsible for locating specific hazards fall into this category.
- Avoidance. These controls are applied when leaders take positive action to prevent contact with an identified hazard.

2. The pistol control the critical point

Fully Assembled Pistol control and field inspections while field stripped control

2.1. First checks the extremely high risk the safety control function

2.1.1. Trigger Safety control function

With the slide forward, action set and the trigger forward, press on both sides of the trigger and try to move the trigger backwards. The trigger should only move slightly rearward. Be careful not to press on the center portion of the trigger pad. This verifies the trigger lever safety is present, operational and would prevent any unwanted

rearward movement of the trigger bar. After making sure the pistol is unloaded, point it in a safe direction and pull the trigger. When the finger depresses the trigger lever safety, it should allow the trigger lever safety and trigger to move rearwards and release the firing pin.

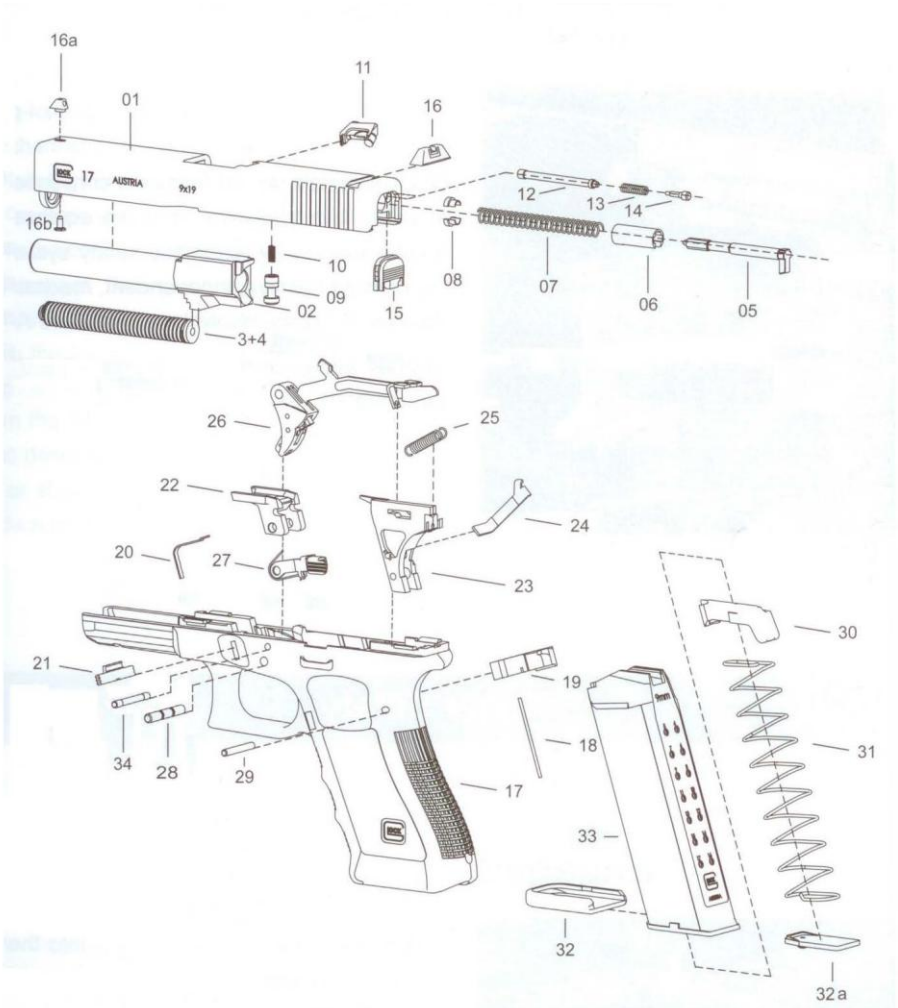

1.	Slide	12.	Extractor depressor plunger	20.	Slide lock spring	30.	Follower
2.	Barrel	13.	Extractor depressor plunger spring	21.	Slide lock	31.	Magazine spring
3. 4.	Recoil spring assembly	14.	Spring-loaded bearing	22.	Locking block	32.	Magazine floor plate
5.	Firing pin	15.	Slide cover plate	23.	Trigger mechanism housing with ejector	32a.	Magazine insert
6.	Spacer sleeve	16.	Rear sight	24.	Connector	33.	Magazine tube
7.	Firing pin spring	16a/b.	Front sight / screw	25.	Trigger spring	34.	Locking block pin
8.	Spring cups	17.	Receiver	26.	Trigger with trigger bar	35.	Channel liner
9.	Firing pin safety	18.	Magazine catch spring	27.	Slide stop lever		
10.	Firing pin safety spring	19.	Magazine catch	28.	Trigger pin		
11.	Extractor			29.	Trigger housing pin		

Figure 3. Exploded Drawing GLOCK-17

2.1.2. Drop Safety control function

Using your fingers, pull the trigger forward. On the top of the back of the trigger bar, you will find the cruciform. The arms of the cruciform rest on the drop safety ledge when the trigger is in the forward position. The drop safety ensures the back of the trigger bar does not move downwards and release the trigger bar unless the trigger is pulled fully to the rear. With your pin punch centered on top of the cruciform, press down firmly and see if the back of the trigger bar will move downwards. It should not move down unless the trigger is pulled. After seeing that the drop safety is operational, press forward on the vertical extension of the trigger bar and pull the trigger. The back of the trigger bar should move backwards and then downwards. This shows that the drop safety would prevent any premature separation of the trigger bar and firing pin.

2.1.3. Firing Pin Safety Engagement

With the slide off the receiver, use your finger to pull back on the firing pin lug. Ease the lug forward again and it will rest against the firing pin safety. The firing pin safety should block any forward movement of the firing pin. Press forward on the back of the firing pin lug and attempt to force the firing pin forward. There should be no forward movement of the firing pin unless the safety is depressed. If there was no forward movement with the safety engaged, then press in on the firing pin safety and the firing pin should now move freely forwards. This inspection verifies that the firing pin safety does block the firing pin and prevents any forward movement unless the safety is depressed.

2.2. Second checks the high risk the safety control function

2.2.1. Fitted slide and parts

Slide Lock and recoil spring with guide rod assembly:

With thumb and forefinger, try to pull down on both sides of the slide lock lever. It should not move downwards if the slide is forward and locked in battery. This lets you know the slide lock is present and “locked” properly. Using the disassembly grip, move the slide rearward approximately 3 mm. Pull down on both sides of the slide lock and release. This verifies the slide lock will "unlock" and the spring is operational. With the slide lock lever fully engaged, point the

pistol in a safe direction and pull the trigger while pushing the slide forward. The slide should remain “locked” and not move forward off the receiver.

The recoil spring should be strong enough to move the slide forward reliably to chamber cartridges even if the pistol is somewhat dirty, dry or the ammunition is not perfect. With an unloaded pistol, point it 45° upwards and pull the trigger. While holding the trigger back, pull the slide to the rear and release it very slowly. The recoil spring should be able to push the slide completely forward and fully into battery. This test verifies that the recoil spring is strong enough to chamber ammunition despite less than ideal circumstances.

Firing Pin Safety Release:

When the trigger is pulled, the firing pin safety moves upwards and clears the firing pin channel to allow the firing pin to move freely to strike the primer with sufficient force. With an unloaded pistol, point it in a safe direction and pull the trigger. Hold the trigger rearward and shake the entire pistol. You should hear the firing pin moving forwards and backwards. This ensures the firing pin channel is unobstructed and the firing pin safety has been moved enough to allow the firing pin to move freely.

2.3. Third checks moderate risk the pistol maintenance

Maintenance and cleaning Supplies

Using the disassembly grip, retract the slide approximately 3 mm while pulling down on both sides of the slide lock. While holding the slide lock in the downward position, move the slide forward. Remove the recoil spring/guide rod assembly by grasping the end nearest the barrel lug and pulling it straight up. Lift up on the barrel lug and remove the barrel. You should have the following: slide, barrel, recoil spring assembly, receiver and magazine.

Use only solvents and lubricants designed for use on firearms. Any product that is advertised and/ or marketed for use on guns may be used on GLOCK pistols. When using solvents, make sure all solvent is removed before lubrication, use or storage of the firearm. Under some circumstances, a dry cleaning may be appropriate. After cleaning, GLOCK pistols require a minimum of lubrication.

After a thorough cleaning, remove any remaining solvent from the pistol. Using a quality gun oil or grease product, lightly lubricate the barrel, barrel hood, barrel lug and the inside of the slide where the barrel hood contacts the slide. Apply a small amount of lubricant on either the frame rails or inside the slide grooves. Once the slide is replaced on the receiver and the action worked several times, the lubricant will be distributed equally along the slide grooves and frame rails.

Most important is one drop of oil placed just under the connector hook (located just above the right rear receiver rail). Any lubricant placed here will move down where the connector and trigger bar meet. If this area is not properly lubricated, the result may be a "hard" trigger pull that can lead to connector and/or trigger bar damage. GLOCK pistols are designed to operate properly with minimal lubrication. Large quantities of oil or grease may collect unburned powder, grit, dust or other residue that could interfere with proper functioning of any fire- arm. Extreme climate could affect large amounts of lubricant.

2.4. Forth checks low risk the pistol component

Due to the high level of development of weapons of component failure is low.

2.4.1. Barrel

Inspect the barrel to ensure that the bore is clear. Using a proper size bore brush or cloth patch, push it all the way through from the chamber and out the muzzle end of the barrel. Heavy fouling may require multiple passes. With a small brush, clean the lug areas, feed ramp and outside surfaces of the barrel. When satisfied all residue and solvent has been removed and all surfaces are dry, move to the slide.

2.4.2. Slide

Inspect the slide for any obvious fouling. Holding the slide with the firing pin channel up to prevent solvents from entering, clean the breech face and extractor area with the toothbrush. Take care to scrub under the extractor hook. Brush down the slide grooves, the ejection port area and all other surfaces. For cleaning the openings of the slide use GLOCK channel maintenance kit. When satisfied all

residue and solvent has been removed, move on to the recoil spring assembly.

2.4.3. Recoil Spring

Inspect the recoil spring/guide rod assembly for wear and obvious fouling. Using a cloth or brush, clean all surfaces. When satisfied all residue and solvent has been removed, move on to the receiver.

2.4.5. Receiver

Use the brush to clean the rails and brush down all other surfaces as necessary. Be certain all solvent and residue has been removed before you attempt to reassemble the pistol.

2.4.6. Magazine

Don't disassemble. Use a brush or cloth to clean down all surfaces as necessary.

STEP 4. AND STEP 5. Implement controls and supervise and evaluate

Leaders ensure that controls are integrated into control instructions, written and verbal orders, mission briefings, and staff estimates. The critical check for this step, with oversight, is to ensure that controls are converted into clear, simple execution orders understood at all levels.

Leaders supervise mission rehearsal and execution to ensure standards and controls are enforced. Techniques may include spot-checks, inspections, situation reports and brief-backs, buddy checks, and close supervision. During the mission, leaders continuously monitor controls to ensure they remain effective. They modify them as necessary. Leaders and individuals anticipate, identify, and assess new hazards to implement controls. They continually assess variable hazards such as fatigue, equipment serviceability, and the environment. Leaders modify controls to keep risks at an acceptable level.

Conclusion

Risk management must not be treated as an afterthought. It must be planned for up front as a preventive measure. Leaders and managers of equipment & materiel acquisition, base operations, and industrial operations must budget risk control costs up front at the level of expected payback over the duration of the activity, or the life cycle of materiel/weapons system. When integrating risk management into sustained operations, leaders must consider increases in turbulence, personnel turnover, critical skill atrophy, and mission development.

Bibliography

[1] ATP 5-19 Risk Management US ARMY

[2] FM 100-14, Risk Management, 23 APRIL 1998. US ARMY

[3] ORM 1-0 Operational Risk Management USMC Marine Corps Institute

[4] Navy and Marine Corps Public Health Center, A Risk Communication Primer-Tools and Techniques

[5] U.S. Department of Homeland Security, Understanding Risk Communication Theory: A Guide for Emergency Managers and Communicators Report to Human Factors/Behavioral Sciences Division, Science and Technology Directorate, May 2012

[6] Glock instruction for use

[7] Glock Armorer's Manual 2009

[8] ISO 31000:2009 - Principles and Guidelines on Implementation

[9] ISO/IEC 31010:2009 - Risk Management - Risk Assessment Techniques

[10] ISO Guide 73:2009 - Risk Management – Vocabulary